100.20.00054

Lavabo sobre encimera

Medidas: 46x46x16 cm

Porcelana Vitrea

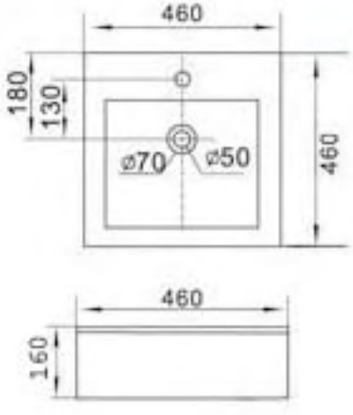


Fossil Natura

Sanitary Fashion

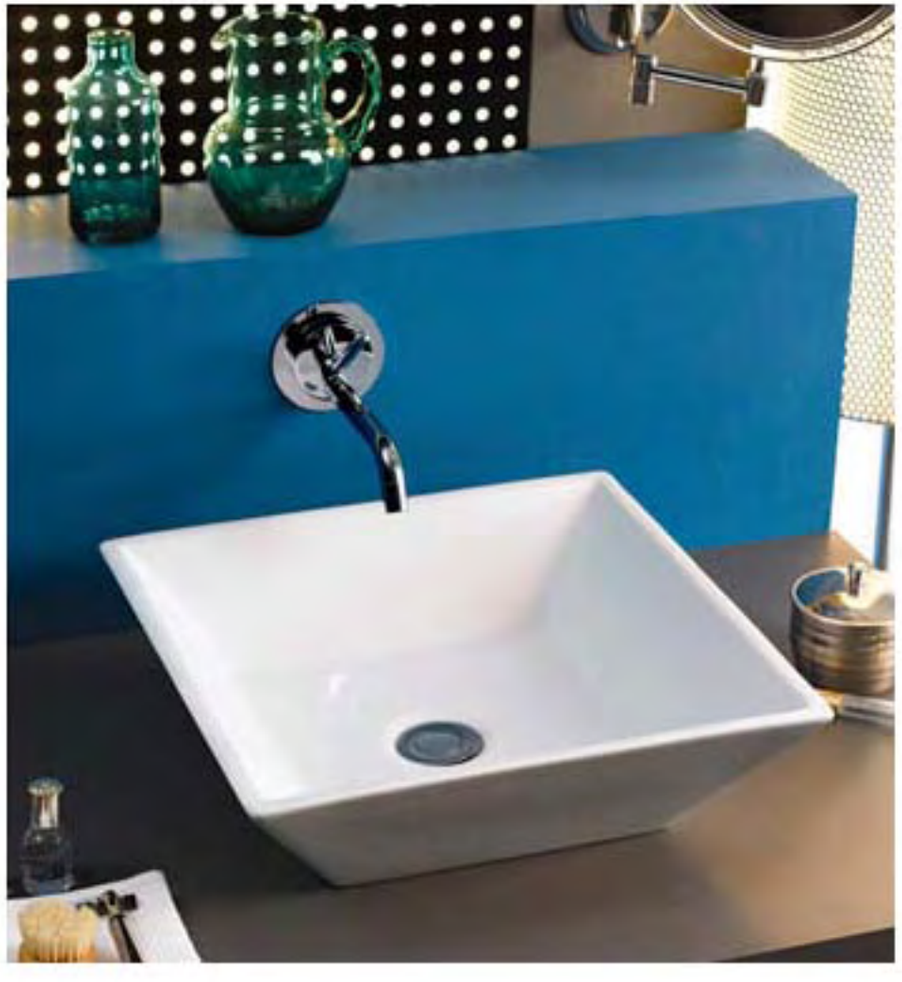

100.20.00055

Lavabo sobre encimera

Medidas: 41x41x11 cm

Porcelana Vitrea

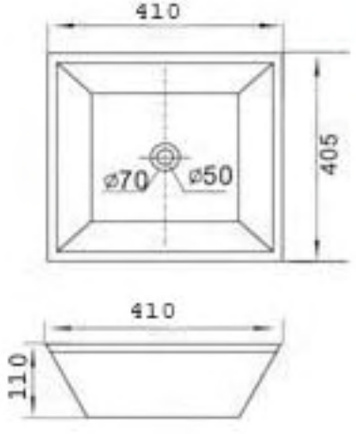


Fossil Natura

Sanitary Fashion

# *INFORME DE TARIFAS DE ARTICULOS*

GALLEGO HERMANOS, S.L.

| | | Tarifa 1 | |
|---|---|---|---|
| **CODIGO** | **DESCRIPCION** | **PRECIO** | **UBICACION** |
| 1212 FOSSIL NATURA-LAVABOS | | | |
| 6002 | LAVABO S/EN.DAKOTA BLANC.00058 | 55.00 | |
| 6004 | LAVABO S/EN.41X41X11 BLA.00055 | 59.50 | |
| 6005 | LAVABO S/EN.KANSAS BLANC.00054 | 66.67 | |
| 6006 | LAVABO S/EN.60X43X11 BLA.00050 | 61.20 | |
| 6007 | LAVABO S/EN.45X45X18 BLA.00051 | 61.20 | |
| 6008 | LAVABO S/EN.50X50X15.5 BLA.052 | 61.20 | |
| 6009 | LAVABO S/EN.41X41X15 BLAN.0046 | 64.60 | |
| 6010 | LAVABO S/EN.48X47.5X16 BLA.048 | 71.40 | |
| 6011 | LAVABO S/EN.46X46X11 BLAN.0047 | 64.60 | |
| 6012 | LAVABO S/EN.41X41X16.5 BL.0044 | 64.60 | |